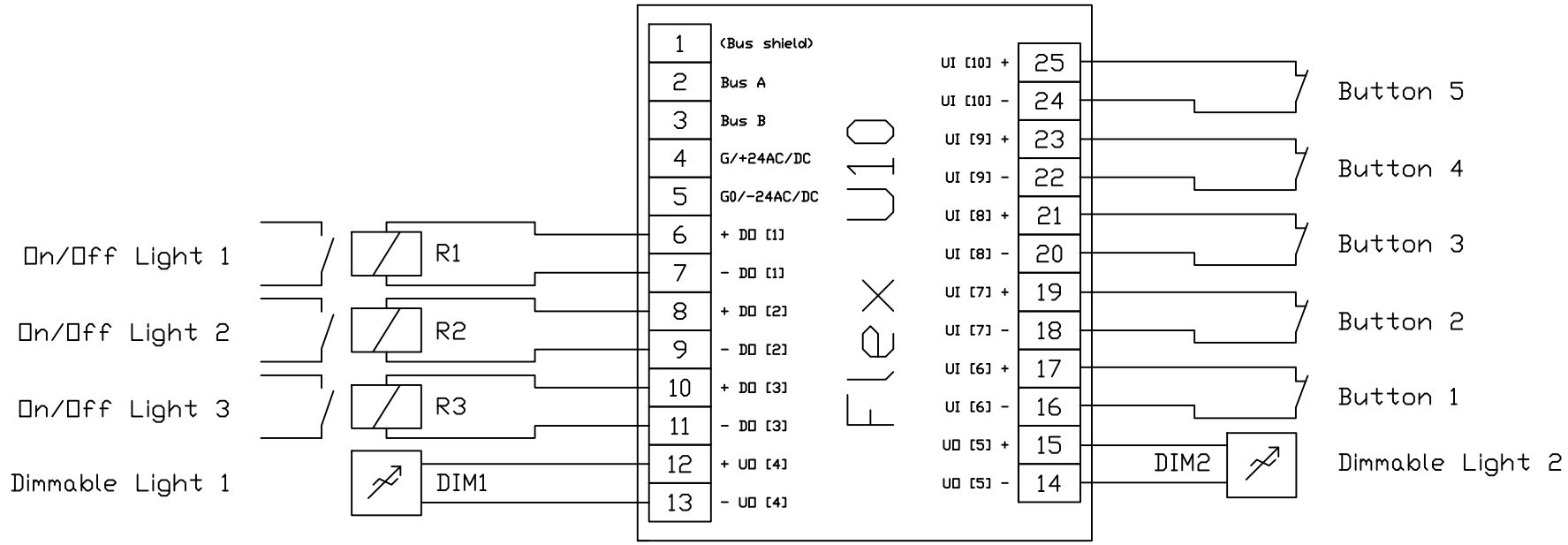

LONIX Teollisuuskatu 33, 00510 Helsinki, Finland	Date 03.09.13 Date Date	Drawn by EvRo Designed by Approved by	Project name and address Flex U10 Module SW U10I□-A	Drawing Connections
			Sheet/of 1/1 Diagram No.: No. of	Rev. A

A revision REVISION
B revision REVISION
C revision REVISION
D revision REVISION
E revision REVISION
F revision REVISION